J148K
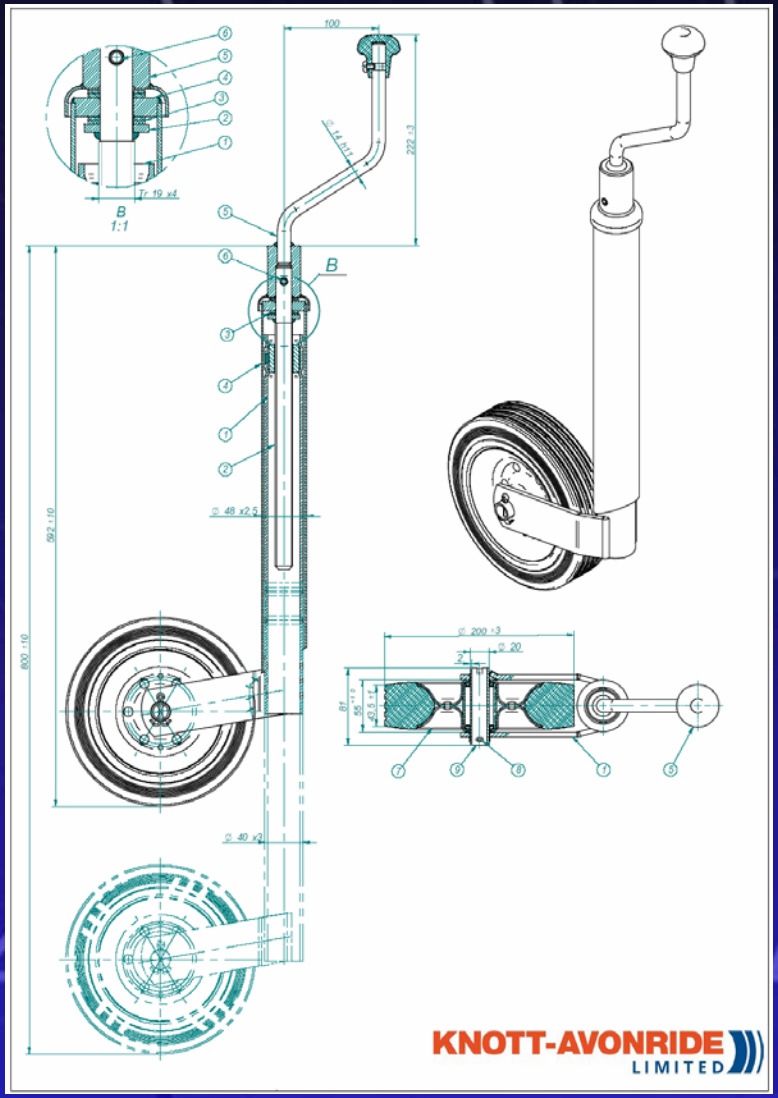
KNOTT-AVONRIDE Limited