B42C3

KNOTT-AVONRIDE Limited

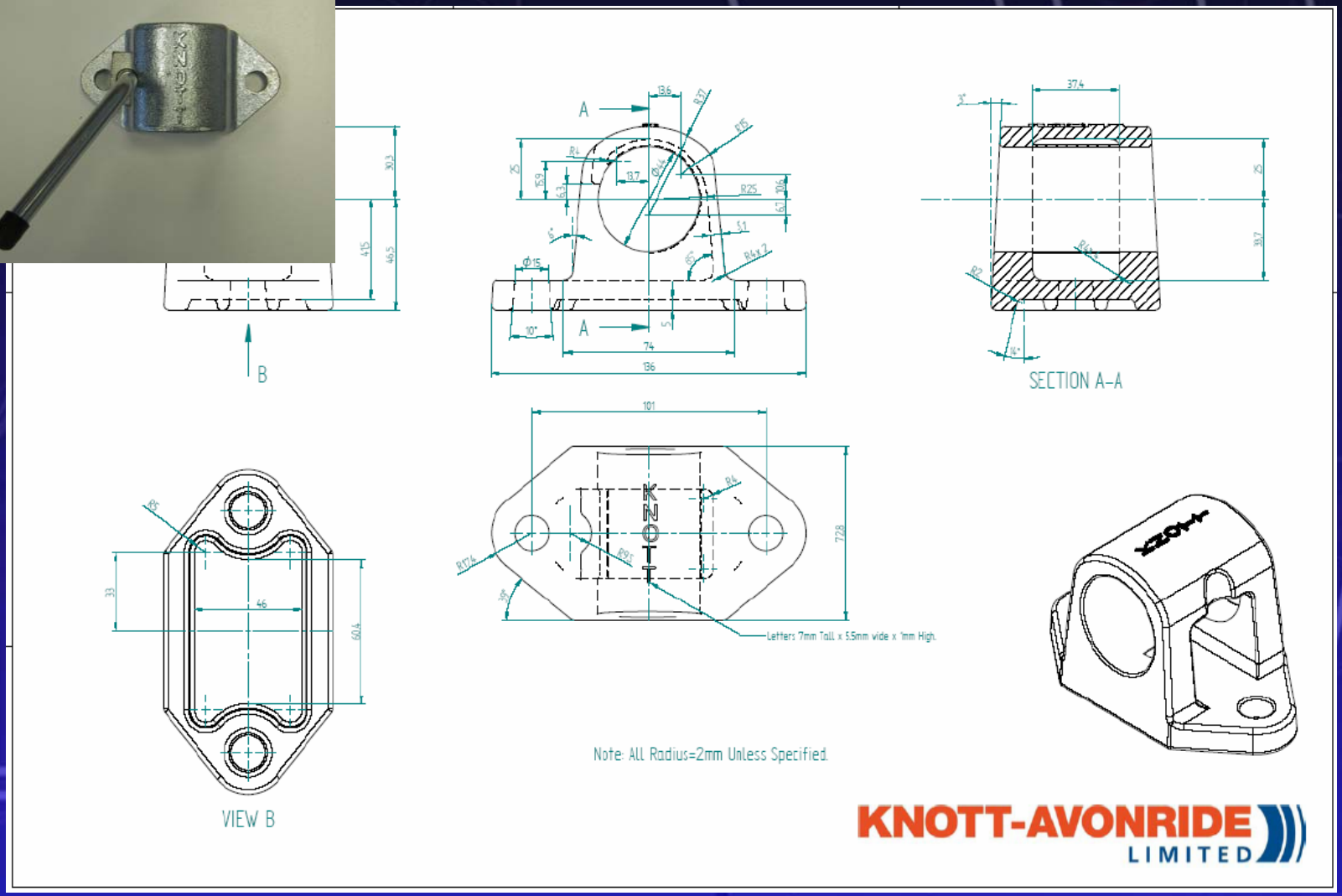

KNOTT-AVONRIDE LIMITED